Pressure Switches

G1/8, conical, threaded ports internal or external

engineering mannesmann Rexroth

Technical Data

Type		Diaphragm, spring loaded
Working pressure range		See table
Pressure	max	20 bar
Ambient temperature range		–20° C to +100° C
Medium		Compressed air, lubricated or non-lubricated
Weight		0,09 kg
Materials	Body	Brass
	Seals	NBR (Fig. 1) FKM (Fig. 2)
Technical Information		
Voltage	max.	42 V DC/AC
Rating	max.	100 VA
Switching element		Normally open (by rising pressure)
Switching frequency		200/min
Electrical connection		AMP 6,3 x 0,8
Protection (with protective cap)		IP 65 to IEC 529 (DIN VDE 0470) Terminal IP 00
Installation position		Any
Pressure adjustment		Via adjusting screw



Code No.

	Fig.	Threaded port ISO 228/1	Working pressure range	Tolerance	Code no.
	1	G 1/8 conical out	1 to 10 bar	± 0,5 bar	**894 040 012 2**
	2	G 1/8 conical in	-0,2 to -1 bar	± 0,1 bar	**894 040 011 2**

Accessories (to be ordered separately)

Accessory	Type	Code no.
	Protective cap 28 mm dia. with cable entry for 1,5 to 5 mm cable dia.	**894 160 011 4**

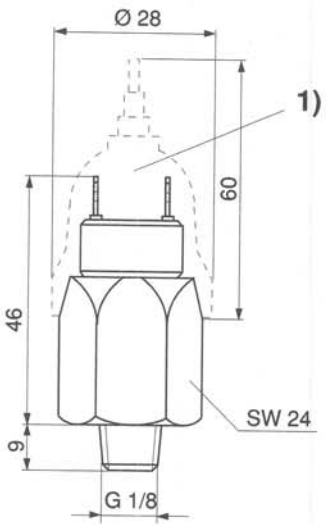

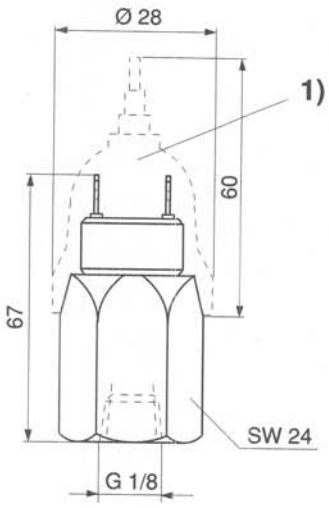

1) Protective cap PG 7 SW = A/F