50mm Diameter General Purpose Dry Pressure Gauge



Application

For the measurement of fluid liquids that are not:- highly viscous, high temperature (over 60°C), likely to solidify/crystallize or corrosive to copper or tin alloys.

Also suitable for gases (excluding oxygen or acetylene) up to 25 bar maximum.

Pneumatics
Air Compressors
HVAC Industry
Water Industry

Description

Nominal Size
50mm

Accuracy
+/- 2.5% FSD

Scales
PSI Outer (Black) & BAR Inner (Red) - Pressure
“HG Outer (Black) & BAR Inner (Red) - Vacuum

Ranges
-30/0”HG Vacuum to 0/400 PSI Pressure

Mounting Options
Bottom - Direct Mounting Only (standard)
Centre Back - Direct Mounting Only (standard)

Operating Temperature
Ambient: -20/+60ºC
Medium: +60ºC maximum

Temperature Effect
Variation in indication caused by temperature
± 0.04 x (t2 – t1)% of the span
t1 is the reference ambient temperature in ºC
t2 is the ambient temperature in ºC

Ingress Protection
IP 40 as per EN 60529

Case
Enameled Steel - Black

Window
Acrylic - Crystal clear, push-fit

Pressure Element
CU Alloy - Sealed Bourdon tube C-Type

Joints
Soldered with tin alloy

Movement
High Precision Brass

Process Connection & Block
Brass - 1/8” BSPT (tapered) male (standard)
Brass - 1/4" BSPT (tapered) male (standard)
Brass - 14mm Square block

Pointer
Aluminium - Black

Dial
Aluminium - White

Special Options
Other scales/ranges
Customer logo on dial
Other process connections

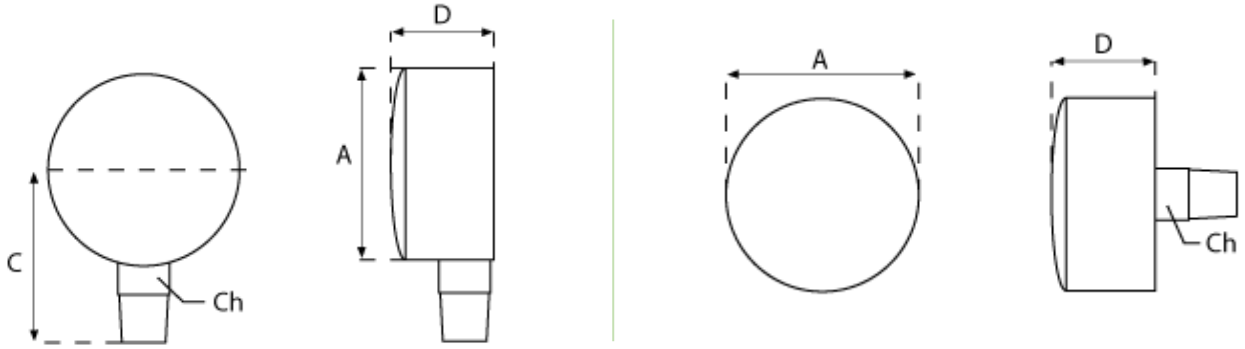

A	C	Ch	D
51	45	14	27

(Dimensions in mm)

Dial Markings

Outer Scale					Inner Scale			
Full Scale	Numbering Every	Divisions Major Every	Divisions Minor Every		Full Scale	Numbering Every	Divisions Major Every	Divisions Minor Every
-30 in Hg	-5 in Hg	-2.5 in Hg	-0.5 in Hg		-1 bar	-0.2 bar	-0.1 bar	-0.02 bar
15 psi	2.5 psi	0.5 psi	0.5 psi		1 bar	0.2 bar	0.1 bar	0.02 bar
30 psi	5 psi	1 psi	1 psi		2.1 bar	0.5 bar	0.1 bar	0.05 bar
60 psi	10 psi	2 psi	2 psi		4.2 bar	1 bar	0.2 bar	0.1 bar
100 psi	20 psi	10 psi	2 psi		7 bar	1 bar	0.2 bar	0.2 bar
160 psi	40 psi	10 psi	5 psi		11 bar	2 bar + 11 bar	1 bar	0.2 bar
200 psi	50 psi	25 psi	5 psi		14 bar	2 bar	1 bar	0.5 bar
300 psi	50 psi	10 psi	10 psi		21 bar	5 bar	1 bar	0.5 bar
400 psi	100 psi	50 psi	10 psi		28 bar	4 bar	1 bar	0.5 bar

Product Codes

	Nominal Size	Range	Connection	Thread
B101A139A	50mm	-30" Hg+bar	Direct Bottom	1/8" BSPT
B101A140A	50mm	15 psi+bar	Direct Bottom	1/8" BSPT
B101A142A	50mm	30 psi+bar	Direct Bottom	1/8" BSPT
B101A144A	50mm	60 psi+bar	Direct Bottom	1/8" BSPT
B101A146A	50mm	100 psi+bar	Direct Bottom	1/8" BSPT
B101A148A	50mm	160 psi+bar	Direct Bottom	1/8" BSPT
B101A150A	50mm	200 psi+bar	Direct Bottom	1/8" BSPT
B101A152A	50mm	300 psi+bar	Direct Bottom	1/8" BSPT
B101A154A	50mm	400 psi+bar	Direct Bottom	1/8" BSPT
B101E139A	50mm	-30" Hg+bar	Direct Centre Back	1/8" BSPT
B101E140A	50mm	15 psi+bar	Direct Centre Back	1/8" BSPT
B101E142A	50mm	30 psi+bar	Direct Centre Back	1/8" BSPT
B101E144A	50mm	60 psi+bar	Direct Centre Back	1/8" BSPT
B101E146A	50mm	100 psi+bar	Direct Centre Back	1/8" BSPT
B101E148A	50mm	160 psi+bar	Direct Centre Back	1/8" BSPT
B101E150A	50mm	200 psi+bar	Direct Centre Back	1/8" BSPT
B101E152A	50mm	300 psi+bar	Direct Centre Back	1/8" BSPT
B101E154A	50mm	400 psi+bar	Direct Centre Back	1/8" BSPT
B101A139B	50mm	-30" Hg+bar	Direct Bottom	1/4" BSPT
B101A140B	50mm	15 psi+bar	Direct Bottom	1/4" BSPT
B101A142B	50mm	30 psi+bar	Direct Bottom	1/4" BSPT
B101A144B	50mm	60 psi+bar	Direct Bottom	1/4" BSPT
B101A146B	50mm	100 psi+bar	Direct Bottom	1/4" BSPT
B101A148B	50mm	160 psi+bar	Direct Bottom	1/4" BSPT
B101A150B	50mm	200 psi+bar	Direct Bottom	1/4" BSPT
B101A152B	50mm	300 psi+bar	Direct Bottom	1/4" BSPT
B101A154B	50mm	400 psi+bar	Direct Bottom	1/4" BSPT
B101E139B	50mm	-30" Hg+bar	Direct Centre Back	1/4" BSPT
B101E140B	50mm	15 psi+bar	Direct Centre Back	1/4" BSPT
B101E142B	50mm	30 psi+bar	Direct Centre Back	1/4" BSPT
B101E144B	50mm	60 psi+bar	Direct Centre Back	1/4" BSPT
B101E146B	50mm	100 psi+bar	Direct Centre Back	1/4" BSPT
B101E148B	50mm	160 psi+bar	Direct Centre Back	1/4" BSPT
B101E150B	50mm	200 psi+bar	Direct Centre Back	1/4" BSPT
B101E152B	50mm	300 psi+bar	Direct Centre Back	1/4" BSPT
B101E154B	50mm	400 psi+bar	Direct Centre Back	1/4" BSPT