

BHP 320 442

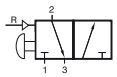

BHP 320 462

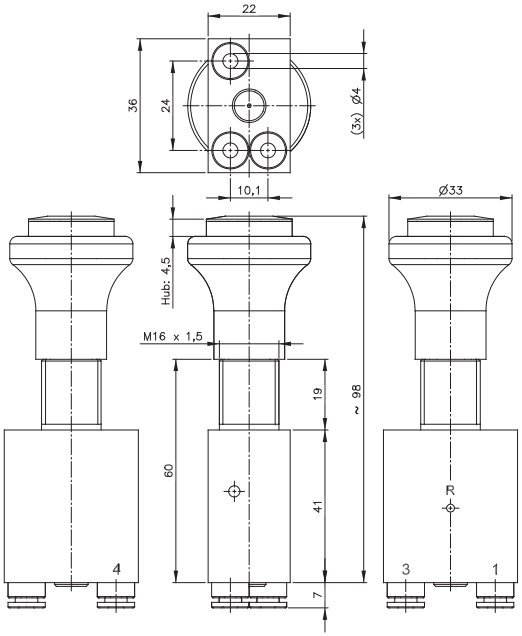

BHP 320 442

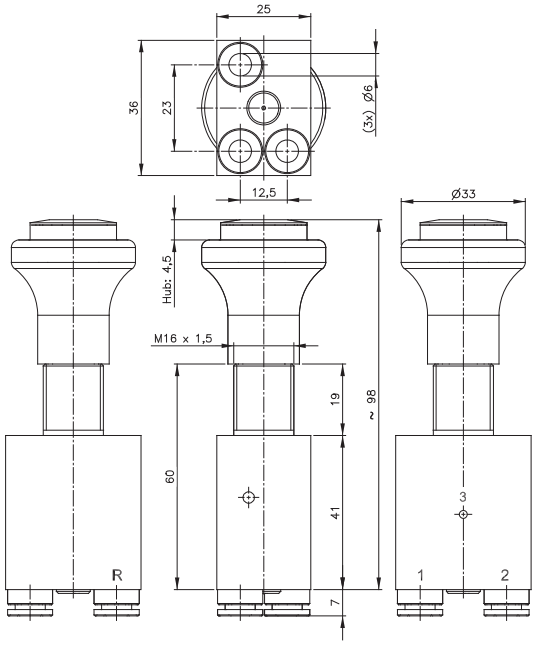

BHP 320 462



Manually actuated 3/2-way spool valve with 2 stable positions and pneumatic reset.

Ports on the bottom of the valve are equipped with integrated push-in fittings. Exhaust is undeducted.

If pressure is applied to port 4 (pneumatic reset-port) the stem is pulled in. The knob carries an indicator ring that sticks out when the valve is pulled = actuated.

The following knob-colours are available:

Colour code	Colour of knob	Colour of indicator
1	black	white
2	red	white
3	green	red
4	yellow	white
5	blue	white

If requested we add fixing nut DIN 439 BM 16 x 1 material: steel zinc plated.

Type	Function	Ports	Air flow	Operating press.	Weight
BHP 320 442 _	3/2-way	pif 4 mm	300 l/min	1 - 16 bar	0,13 kg
BHP 320 462 _	3/2-way	pif 6 mm	300 l/min	1 - 16 bar	0,13 kg

Please add one digit for color of knob.

BHP 520 442/BHP 520 462

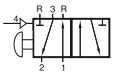

BHP 520 442

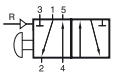

BHP 520 462



Manually actuated 5/2-way spool valve with 2 stable positions and pneumatic reset.

Ports on the bottom of the valve are equipped with integrated push-in fittings. Exhaust is undeducted.

If pressure is applied to port 4 (pneumatic reset-port) the stem is pulled in. The knob carries an indicator ring that sticks out when the valve is pulled = actuated.

The following knob-colours are available:

Colour code	Colour of knob	Colour of indicator
1	black	white
2	red	white
3	green	red
4	yellow	white
5	blue	white

If requested we add fixing nut DIN 439 BM 16 x 1 material: steel zinc plated.

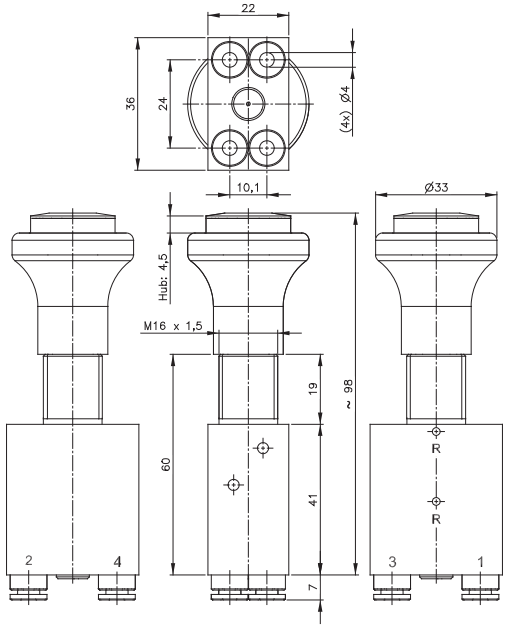

BHP 520 442

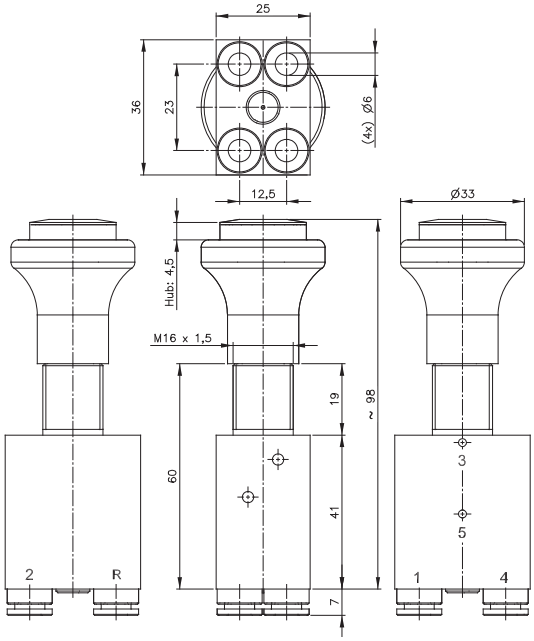

BHP 520 462

Type	Function	Ports	Air flow	Operating press.	Weight
BHP 520 442 _	5/2-way	pif 4 mm	300 l/min	1 - 16 bar	0,13 kg
BHP 520 462 _	5/2-way	pif 6 mm	300 l/min	1 - 16 bar	0,13 kg

Please add one digit for color of knob.