0920 JIS FEMALE 60° CONE (Nissan)

(JIS-N)

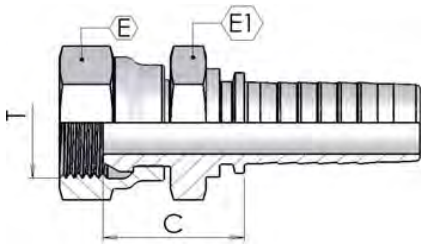

part number	hose I.D.		Dimension					List Price
			dash	thread	hex		cut-off	
	in	mm	size	T	E	E1	C	£
0920-04-04	1/4	6.4	04	1/4-19	19	19	23	
0920-06-06	3/8	9.5	06	3/8-19	22	22	28	
0920-08-08	1/2	12.7	08	1/2-14	27	27	27	
0920-12-12	3/4	19	12	3/4-14	32	32	29	
0920-16-16	1	25.4	16	1-11	38	38	31	

0930 JIS FEMALE 60° CONE (Toyota)

(JIS-T)

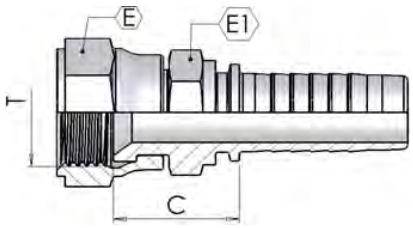

part number	hose I.D.		Dimension					List Price
			dash	thread	hex		cut-off	
	in	mm	size	T	E	E1	C	£
0930-04-04	1/4	6.4	04	1/4-19	19	17	20	2.33
0930-06-06	3/8	9.5	06	3/8-19	22	19	22	2.51
0930-08-08	1/2	12.7	08	1/2-14	27	22	26	2.70
0930-12-12	3/4	19	12	3/4-14	32	30	29	5.11
0930-16-16	1	25.4	16	1-11	38	36	31	8.57
0930-20-20	1,1/4	31.8	20	1,1/4-11	50	46	35	16.22
0930-24-24	1,1/2	38.1	24	1,1/2-11	55	50	28	23.89

Copyright © I.M.M. Hydraulics (UK) Ltd 2009

0980S 45° JIS SWEPT ELBOW (Toyota) - Welded

(JIS-T 90°)

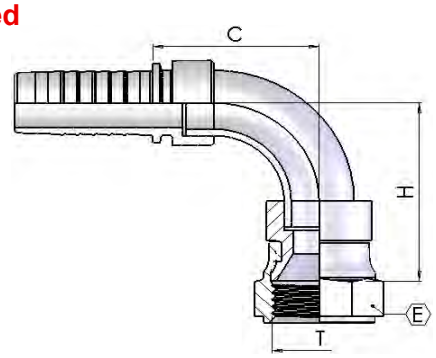

part number	hose I.D.		Dimension					List Price
			dash	thread	hex	drop	cut-off	
	in	mm	size	T	E	H	C	£
0980S04-04	1/4	6.4	04	1/4-19	19	35	38	5.72
0980S06-06	3/8	9.5	06	3/8-19	22	30	27	6.16
0980S08-08	1/2	12.7	08	1/2-14	27	39	33	6.81
0980S12-12	3/4	19	12	3/4-14	32	55	48	13.14
0980S16-16	1	25.4	16	1-11	38	62	57	22.52
0980S20-20	1,1/4	31.8	20	1,1/4-11	50	65	63	37.26
0980S24-24	1,1/2	38.1	24	1,1/2-11	55	83	80	65.65

1030S Curva JIS 45° (Toyota) - Saldata

(JIS-T 45°)

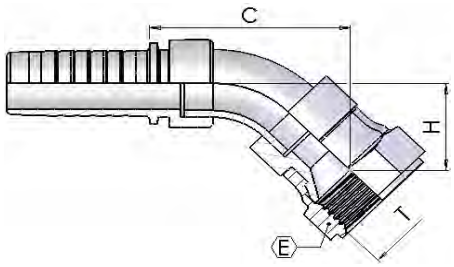

part number	hose I.D.		Dimension					List Price
			dash	thread	hex	drop	cut-off	
	in	mm	size	T	E	H	C	£
1030S04-04	1/4	6.4	04	1/4-19	19	18	44	
1030S05-06	5/16	7.9	05	3/8-19	22	18	38	
1030S06-06	3/8	9.5	06	3/8-19	22	18	38	7.13
1030S08-08	1/2	12.7	08	1/2-14	27	20	40	
1030S12-12	3/4	19	12	3/4-14	32	26	56	
1030S16-16	1	25.4	16	1-11	38	33	72	
1030S20-20	1,1/4	31.8	20	1,1/4-11	50	29	67	
1030S24-24	1,1/2	38.1	24	1,1/2-11	55	36	85	

Copyright © I.M.M. Hydraulics (UK) Ltd 2009